Physics 2020: Sample Problems for Exam 2

1. The circuit in this diagram has a 42.2 V battery and three resistors with $R_1 = 424\ \Omega$, $R_2 = 120\ \Omega$, and $R_3 = 360\ \Omega$. (a) Calculate the equivalent resistance of this circuit. (Don't forget to show your diagram for each step.) (b) What is the current flowing though R_2? (c) What is the potential drop across R_1? (**Show all work including diagrams!!!**)

a) Parallel:

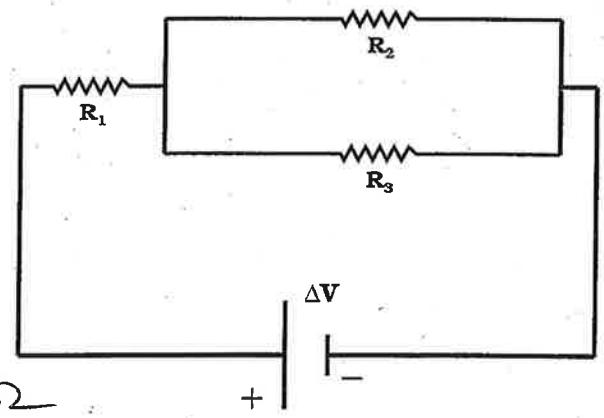

$$\frac{1}{R_a} = \frac{1}{R_2} + \frac{1}{R_3}$$

$$= \frac{1}{120\Omega} + \frac{1}{360\Omega}$$

$$= \frac{3}{360\Omega} + \frac{1}{360\Omega} = \frac{4}{360\Omega}$$

$$R_a = \frac{360\ \Omega}{4} = 90.0\Omega$$

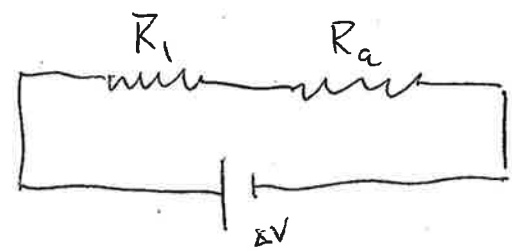

Series:

$$R_{eq} = R_1 + R_a$$

$$= 424\Omega + 90.0\Omega$$

$$= \boxed{514\ \Omega}$$

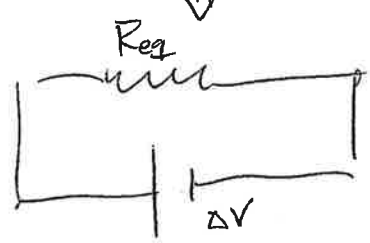

b) $\Delta V_a = \Delta V_2 = \Delta V_3 = I_a R_a$

$$I_{eq} = I_1 = I_a = \frac{\Delta V}{R_{eq}} = \frac{42.2V}{514\Omega}$$

$$= 0.0821\ A = I_a$$

c) $\Delta V_1 = I_1 R_1$

$$= (0.0821\ A)(424\Omega)$$

$$= \boxed{34.8\ V}$$

$$\Delta V_a = I_a R_a = (0.0821\ A)(90.0\Omega) = 7.39\ V = \Delta V_2$$

$$I_2 = \frac{\Delta V_2}{R_2} = \frac{7.39V}{120\ \Omega} = 0.0616\ A = \boxed{61.6\ mA}$$

2. A laboratory experiment consists of an enclosure containing a uniform magnetic field. During an experiment, a charged ion ($q = +26\,e$) circles this magnetic field at a velocity of 54.2% the speed of light in a direction perpendicular to the B-field vector direction. The radius of this curved path is 1.24 m and the mass of this particle is 55.41 m_p. (a) What is the strength of the magnetic field? (b) What is the kinetic energy of this particle? (c) What is the magnetic flux going through this circular path?

$$q = 26\,e = 26\left(1.602\times10^{-19}\,C\right) = 4.165\times10^{-18}\,C$$

$$v = 0.542\,c = 0.542\left(3.00\times10^{8}\,m/s\right) = 1.626\times10^{8}\,m/s$$

$$r = 1.24\,m,\quad m = 55.41\,m_p = 55.41\left(1.673\times10^{-27}\,kg\right)$$

$$= 9.270\times10^{-26}\,kg$$

(a) $B = ?$, $r = \dfrac{mv}{qB}$

$$B = \frac{mv}{qr} = \frac{\left(9.270\times10^{-26}\,kg\right)\left(1.626\times10^{8}\,m/s\right)}{\left(4.165\times10^{-18}\,C\right)\left(1.24\,m\right)}$$

$$= \boxed{2.92\ T}$$

(b) $KE = \frac{1}{2}mv^2 = \frac{1}{2}\left(9.270\times10^{-26}\,kg\right)\left(1.626\times10^{8}\,\frac{m}{s}\right)^2$

$$= \boxed{1.23\times10^{-9}\ J}$$

(c) $\Phi_B = BA$, $A = \pi r^2 = \pi\left(1.24\,m\right)^2 = 4.83\,m^2$

$$\Phi_B = \left(2.92\,T\right)\left(4.83\,m^2\right) = \boxed{14.1\ Wb}$$

3. A 202 turns of wire exist on a 92.6 cm long solenoid. This solenoid produces a magnetic field of 2.34 gauss at its center. (a) What is the current flowing through the coiled wire of this solenoid? (b) If this solenoid has a diameter of 12.2 cm and the B-field is uniform inside this solenoid, what is the magnetic flux through one of the turns inside this solenoid?

$N = 202, \quad L = 92.6 \text{ cm} = 0.926 \text{ m}$

$B = 2.34 \text{ G} \times \frac{1 \text{ T}}{10^4 \text{ G}} = 2.34 \times 10^{-4} \text{ T}$

(a) $B = n\mu_0 I, \quad n = \frac{N}{L} = \frac{202}{0.926 \text{ m}} = 218 \text{ m}^{-1}$

$$I = \frac{B}{n\mu_0} = \frac{2.34 \times 10^{-4} \text{ T}}{(218 \text{ m}^{-1})(4\pi \times 10^{-7} \text{ Tm/A})}$$

$$= \boxed{0.854 \text{ A}}$$

(b)

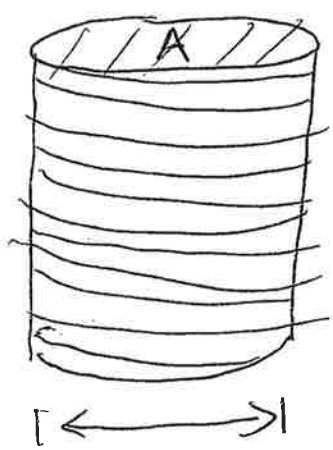

$D = 12.2 \text{ cm}$
$= 0.122 \text{ m}$

$\Phi_B = BA, \quad A = \frac{\pi D^2}{4}$

$$A = \frac{\pi (0.122 \text{ m})^2}{4}$$

$$= 1.17 \times 10^{-2} \text{ m}^2$$

$$\Phi_B = (2.34 \times 10^{-4} \text{ T})(1.17 \times 10^{-2} \text{ m}^2)$$

$$= \boxed{2.74 \times 10^{-6} \text{ Wb}}$$

4. A solenoid containing 988 turns of wire is connected to a circuit. We measure the current change through the wire of 0.224 A/s. When the current reaches 3.66 A, this inductor contains 0.654 J of energy. (a) What is the inductance of this solenoid? (b) How much emf is induced in this solenoid? (c) How much will the magnetic flux change in this inductor in one second of time?

$N = 988$, $\frac{\Delta I}{\Delta t} = 0.224\ A/s$

when $I = 3.66\ A$, $U_L = 0.654\ J$

(a) $U_L = \frac{1}{2} L I^2$, $L = \frac{2U_L}{I^2} = \frac{2(0.654\ J)}{(3.66\ A)^2}$

$$\boxed{L = 9.76 \times 10^{-2}\ H}$$

(b) $\mathcal{E} = -L\frac{\Delta I}{\Delta t} = -(9.76 \times 10^{-2}\ H)(0.224\ A/s)$

$$= \boxed{-2.19 \times 10^{-2}\ V}$$

(c) $\mathcal{E} = -N\frac{\Delta \Phi_B}{\Delta t}$, $\frac{\Delta \Phi_B}{\Delta t} = -\frac{\mathcal{E}}{N}$

$\Delta \Phi_B = -\frac{\mathcal{E}}{N}\Delta t = -\frac{(-2.19 \times 10^{-2}\ V)}{988}(1.00\ s)$

$$= \boxed{2.21 \times 10^{-5}\ Wb}$$